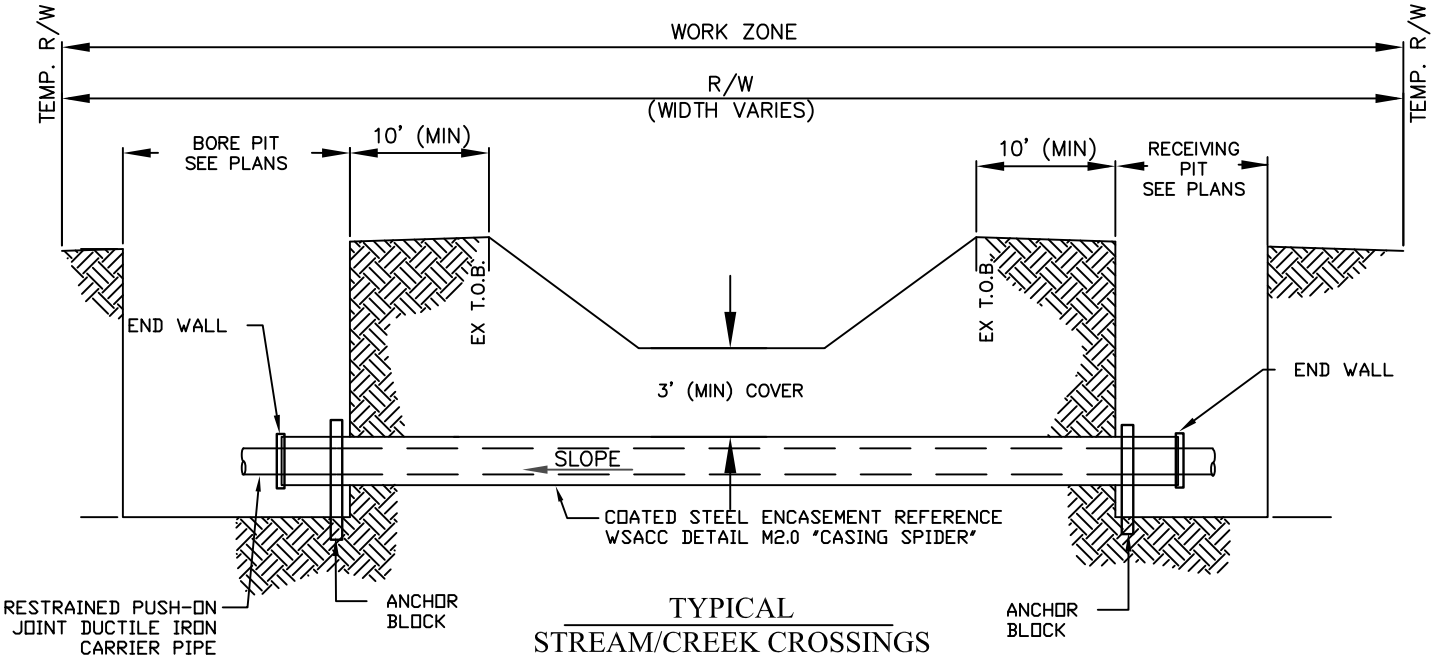

TYPICAL
STREAM/CREEK CROSSINGS
(NTS)

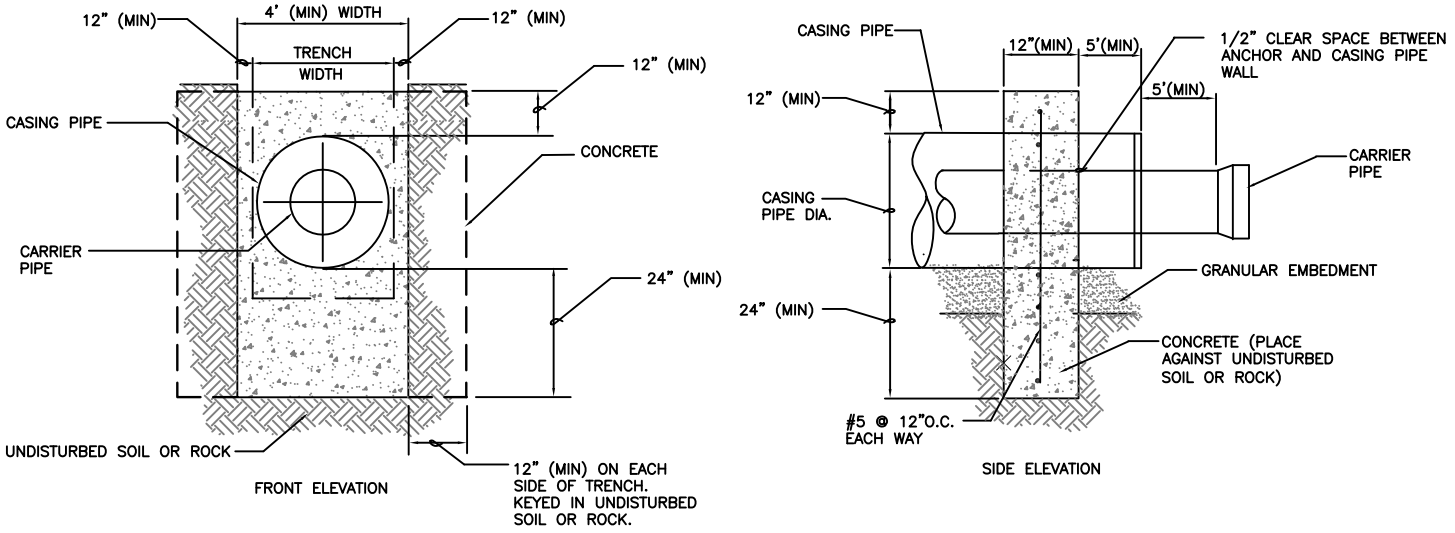

CONC. ANCHOR BLOCK
(NTS)

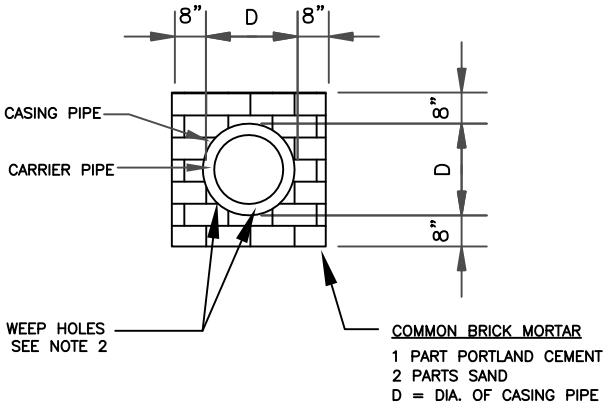

END WALL SECTION
(NTS)

GENERAL NOTES:

1. SEE DRAWINGS FOR LOCATION, SIZE AND LENGTH OF STEEL PIPE CASINGS.
2. INSTALL TWO (2) 1-INCH DRAINS EACH SIDE OF CARRIER PIPE IN DOWNHILL END WALL.
3. THE PIT/TRENCH EXCAVATION SHALL IN NO CASE BE CLOSER THAN 10-FEET FROM THE TOP OF STREAM AND/OR CREEK BANK.
4. RESTRAINED PUSH-ON JOINT DUCTILE IRON CARRIER PIPE SHALL EXTEND THROUGH CASING PIPE ASSEMBLY.
5. SEE WSACC DETAIL M2.0 "CASING SPIDER" FOR CASING PIPE AND SPIDER REQUIREMENTS.

Concord NORTH CAROLINA

CITY OF CONCORD
STANDARD DETAIL
STREAM/CREEK
CROSSING

No.	Date	By	REVISION

Drawn By:	Checked By:	Approved By:	Date	Sht	of
SVM	PK	MSH	01/11	1	1